LGP1200/1200/2×75/100PL-E
Automatic grout pump station

1.Description

LGP1200/1200/2×75/100PL-E Automatic grout pump station is a combination of a mixer, circulation pump and grouting pump. It is mainly used for making cement slurry, etc., which is applied to surface/underground construction, such as highway, railway, hydropower, construction, mining, etc.

High-speed eddy current mixer ensures fast and even mixing. Water and cement are quickly mixed into a uniform slurry. The grout is then transferred to the grouting pump, which ensures continuous mixing and grout operations. The machine is integrated with the distributor, PLC, and can freely adjust the proportion of water, cement, and additives, and can be set according to the formula of automatic configuration of materials, greatly improving the work efficiency.

2.Features

1 - 1200L Mixer compartment
2 - Water tank compartment
3 - 1200L Agitator compartment
4 - Grout pump compartment
5 - Command and control panel compartment
6 - Compressor compartment

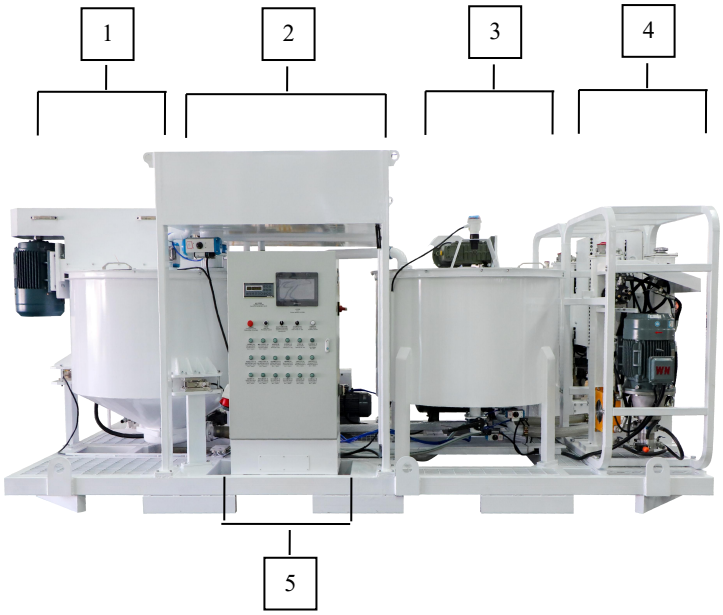

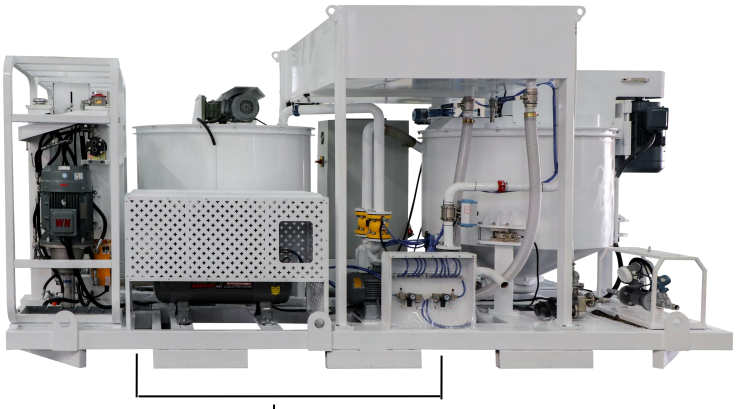

6

1200L Mixer

- 3 sets of weighting units, enabling quantitative feeding of different materials
- High-speed Colloidal Grout Mixer
- Add an auxiliary impeller to achieve three-dimensional stirring, making material mixing more uniform and efficient
- Main pipeline valves are all pneumatic valves

Water tank

- High and low level sensors for automatic water addition
- Two-time water addition to achieve a more accurate water dosage
- Bulit-in external additive tank for mixing 3 materials

1200L Agitator

- Low-speed stirring to prevent the slurry from settling and solidifying
- Agitator has an automatic cleaning function
- Two slurry outlets can be selected as needed

Grout Pump

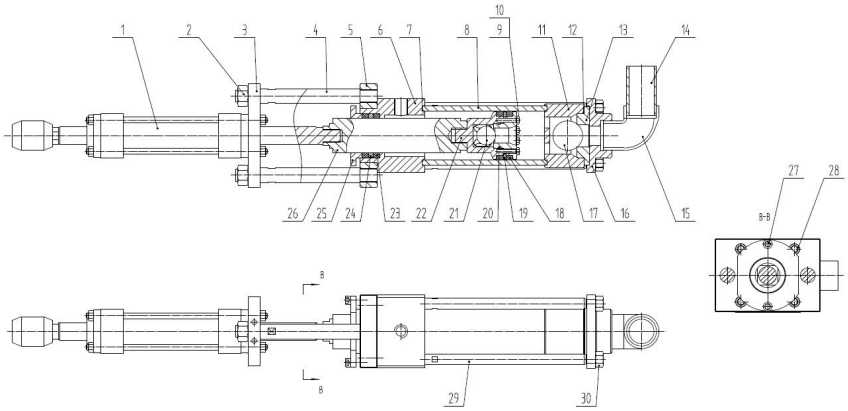

No.	Name	Quantity
30	Nut M18	4
29	Grouting cylinder screw	4
28	Socket head cap screw M14x40	4
27	Socket head cap screw M12x40	2
26	Grouting rod	1
25	Clamp cover	1
24	Steel spacer ring	1
23	Basel seal	2
22	Discharge slurry down seat	1
21	Steel ball SΦ38	1
20	O-rings 46.2x2.65	1
19	Steel cutting ring	1
18	Basel seal	2
17	Steel ball SΦ60	1
16	Suction slurry seat	1

No.	Name	Quantity
15	2'' the right-angle bend	1
14	Discharge slurry joint	1
13	Suction slurry down seat	1
12	O-rings 90 x2. 65	1
11	Discharge slurry upper valve seat	1
10	Discharge slurry down valve seat	1
9	Bolt M8x40	6
8	Grouting cylinder	1
7	O-rings100x2.65	2
6	Discharge slurry seat	1
5	Panel	1
4	Tie-rod	2
3	Oil cylinder mounting plate	1
2	Nut M24	2
1	Oil cylinder	1

- Compact structure
- Single cylinder and double acting type, with continuous pumping and small pressure fluctuation, Uniform slurry
- Fewer spare parts ensure low maintenance costs

Command and control panel

- Easy to operate and maintain
- Two modes of operation: fully automatic mode and manual mode
- The proportion of materials in the formula can be adjusted freely
- Realize automatic configuration and replenishment of materials
- Flameproof electric cabinet, protection grade IP56

◆ 3. Technology Sheet

Name		Data
Model		LGP1200/1200/2×75/100PL-E
Mixer	Capacity (V)	1200L
	Mixture capacity	10m³/h
	W/C ratio	0.5~1
Agitator	Capacity	1200L
	Power	3.0Kw
Circulation pump	Power	22KW
	Rate Rev.	1800r/min
	Flow	1500L/min
Screw feeder	Power	11KW
	Max. delivery volume	20-40t/h
Water supply	Tank capacity	950L
	Water pump	50ZX20-30 (4.0KW)
	Flow@head	20m³/h@30m
Additive supply	Tank capacity	150L
	Additive pump	25SFBX-8 (0.25KW)
	Flow@head	2m³/h@8m
Air supply	Air compressor	EV-80 (4.0KW)
	Exhaust volume	0.52m³/min
Grouting pump (2×1set)	Model	LGH75/100PI-E
	Piston diameter	100mm
	Piston stroke	150mm
	Low pressure@Flow	0-50bar@0-75L/min
	High pressure@Flow	0-100bar@0-40L/min
	Power	11Kw
Dimension(without screw feeder)		4600×2250×2370mm
Weight		4100Kg
Note: We can customize according to your requirements.		

◆ Other Pictures

Zhengzhou Lead Equipment Co., Ltd.
Add：Xisihuan Ring-Road East, Tielu, Xiliu lake sub-district, Zhongyuan District, Zhengzhou, Henan
Web: https://www.leadcrete.net
E-Mail: sales1@leadcrete.com